solartron metrology

orbit3

DIGITAL NETWORK

ORBIT®3 MODULE MANUAL

502914

AMETEK
ULTRA PRECISION TECHNOLOGIES

1.1 DOCUMENTATION CROSS REFERENCE

502990	Orbit3 .NET System Manual	Details on installation and electrical requirements for the Orbit .NET Library compatible products
502989	Orbit3 .NET Software Manual	Details on programming and using the Orbit System with the Orbit .NET Library
	Orbit3 Catalogue	Describes the Orbit system and provides details of the products including specifications and dimensions.
For ORBIT COM/DLL Library based systems and those using Serial commands, use the following manuals:		
502913	Orbit3 System Manual	Details on installation and electrical requirements for the Orbit COM/DLL Library compatible products
502915	Orbit3 Software Manual	Details on programming and using the Orbit System with the Orbit COM/DLL Library

For module connecting details see the relevant section of this manual.
For further documentation such as product user leaflets see the Orbit3 Support Pack for Windows CD.

1.2 TRADEMARKS AND COPYRIGHTS

Microsoft®, Windows®XP, Windows®Vista, Windows®7, Excel®, VBA and VB are registered trademarks or trademarks of Microsoft Corporation in the United States and/or other countries.

Orbit® is a registered trademark of Solartron Metrology Ltd

1.3 CONTACT INFORMATION

For updated information, troubleshooting guide and to see our full range of products, visit our website:
http://www.solartronmetrology.com

2 TABLE OF CONTENTS

1.1 DOCUMENTATION CROSS REFERENCE....2

1.2 TRADEMARKS AND COPYRIGHTS....2

1.3 CONTACT INFORMATION....2

2 TABLE OF CONTENTS....3

3 INTRODUCTION....5

3.1 SCOPE....5

3.2 NAVIGATE THIS DOCUMENT....6

4 SAFETY SUMMARY (ALL MODULES)....7

5 GLOSSARY....7

6 NEW FEATURES WITH ORBIT3....8

7 ORBIT3 MODULES POWER REQUIREMENTS AND ENVIRONMENT....9

7.1 MODULE POWER CONSUMPTION....9

7.2 MODULE OPERATING ENVIRONMENT....9

8 ANALOGUE INPUT MODULE....10

8.1 INTRODUCTION....10

8.2 TECHNICAL SPECIFICATION STANDARD AIM....10

8.2.1 AIM Inputs....10

8.2.2 AIM Performance....10

8.2.3 AIM Environment....11

8.2.4 Connection Details Voltage AIM....11

8.2.5 Connection Details Current AIM....12

8.3 TECHNICAL SPECIFICATION PT100 AIM....13

8.3.1 PT100 AIM relationship between Temperature and Resistance....13

8.3.2 PT100 Temperature and Resistance Tolerance Table....13

8.3.3 AIM PT100 Accuracy....14

8.3.4 Connection Details PT100....14

9 ENCODER INPUT MODULE....15

9.1 INTRODUCTION....15

9.2 TECHNICAL SPECIFICATION....15

9.3 EIM CONNECTION DETAILS....17
9.3.1 Basic EIM Wired Ended Connections....17
9.3.2 Quadrature Mode....17
9.3.3 CountAB Mode Up....18
9.3.4 CountAB Mode Down....18
9.3.5 CountDir Mode Up....19
9.3.6 CountDir Mode Down....19

10 DIGIMATIC INTERFACE MODULE....20

10.1 INTRODUCTION....20

10.2 CONNECTIONS....20

11 DIGITAL INPUT OUTPUT MODULE....21

11.1 INTRODUCTION....21

11.2 TECHNICAL SPECIFICATION....21
11.2.1 DIOM Application....21
11.2.2 Input Port Specification....22
11.2.3 Output Port Specification with External Supply....23
11.2.4 0V connection Rules....24
11.2.5 Output Port Specification Driver Using Orbit Supply....24
11.2.6 Logic Port Specification....25

11.3 CONNECTION DETAILS....25

12 REVISION HISTORY....26

3 INTRODUCTION

3.1 SCOPE

The Orbit®3 Measurement System is a modular measurement system that can be put together quickly, easily and is cost effective. It allows different types of sensors to be easily mixed and integrated on a single network independent of sensor technology

This manual provides technical information about the Orbit3® Measurement System Modules.

Analogue Input Module (AIM)	A module that can take in 3rd party sensors with either voltage of current outputs (E.g. pressure, load cells). A Special variant is available for a PT100 temperature sensor
Encoder Input Module (EIM)	A module that can take in a square wave signal from a rotary encoder or line scale. This allows angular position to be easily brought into the Orbit measurement system for profiling. The EIM can also act as a pseudo controller for Dynamic measurement applications.
Digital Input Output Module (DIOM)	This module can read discrete inputs and set discrete outputs for control functions.
Digimatic Interface Module	This module reads equipments with a digimatic interface such as a Vernier Caliper.

All of the modules can be mixed together with other Orbit products to generate a measurement system.

<u>Examples</u>

Combine an Encoder Module with a rotary encoder to give angular position and then use this to take readings from Digital Probes to profile a round part.

Add an AIM with a PT100 to monitor the temperature during the measurement cycle

Add an AIM with a load cell to weigh the part.

Several Aim can be used with PT100 to monitor and record clean room temperatures for audit trails.

Use the Digital Input Output Module to trigger a PLC to advise a measured part is Ok or not OK.

Use a DIOM to monition interlock relays

3.2 NAVIGATE THIS DOCUMENT

This is a large document, which is a useful reference when writing Orbit applications. To aid navigating the document, the following Navigation tip may be useful:
It is often necessary to jump to another item and then go back to where you jumped from.
This can be done in Adobe Reader by using the ‘Previous Page View’ button:

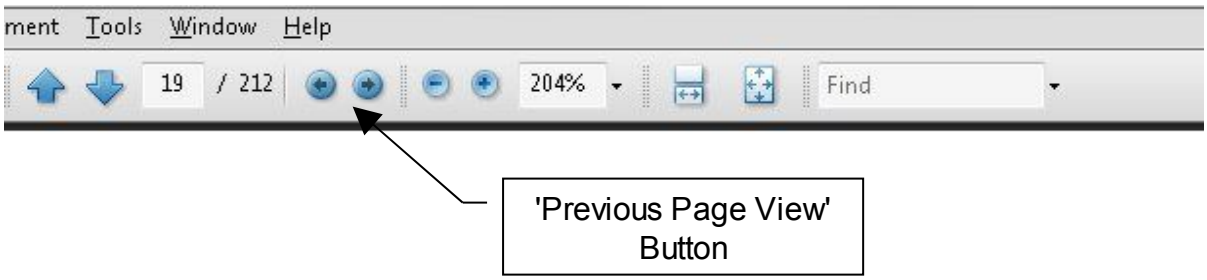

Alternatively, use 'ALT' + left arrow key for Previous Page View.

Other PDF readers will have a similar 'Previous Page View' option.

4 SAFETY SUMMARY (ALL MODULES)

WARNING statements identify conditions or practices that could result in personal injury or loss of life. **CAUTION** statements identify conditions or practices that could result in damage to the equipment or other property **Symbols in this manual** Indicates cautionary or other information	**Warnings and Cautions** **Warning:** Do not operate in an explosive atmosphere. **Warning:** this equipment is not intended for safety critical applications **Warning:** do not exceed maximum ratings as specified in this document under individual modules. **Caution: Low Voltage** This equipment operates below the SELV and is therefore outside the scope of the Low Voltage Directive **Service and Repair** CAUTION: This equipment contains no user serviceable parts. Return to supplier for all service and repair

All of the Orbit Modules are **CE** marked and comply with EN61000-6-3 Electrical Emissions and EN61000-6-2 Electrical Immunity

5 GLOSSARY

Please refer to the Orbit System Manual for information regarding terms used in this document. The Orbit System manual provides a good introduction to the Orbit Measurement System and should be read in conjunction with this document.

6 NEW FEATURES WITH ORBIT3

The Orbit3 system provides the following improvements over Orbit2, while still retaining backward compatibility.

- All DP, AIM and DIOM Modules now have Buffered capability supplied as standard.

- All modules have diagnostic/status LEDs , providing indication for:
    - Orbit Bus communication
    - Low or High Orbit Voltage warning
    - Hardware fault
    - Hot Swap Fault/Error.

For further details of Orbit3 improvements, see the Orbit3 System manual.

7 ORBIT3 MODULES POWER REQUIREMENTS AND ENVIRONMENT

7.1 MODULE POWER CONSUMPTION

Module	Idle Current	Reading Current	Max Loaded Current
	mA	mA	mA
AIM Voltage	69	78	78
AIM Current	71	76	154
AIM PT100	70	91	91
EIM	35	49	1035 see Note1
DIOM	29	42	442
DIM	26	41	41
DP (Digital Probe) see see Note 2	46	60	60

Note 1: this current includes current drawn by the encoder. Therefore the encoder cannot be rated higher than 1000mA. Most encoders are considerably less. If using an encoder which takes a high current please ensure that you have sufficient power available from the Orbit Network. Refer to the Orbit3 System Manual for further information.

Note 2: the Digital Probe is not covered in this manual but the current has been included here for completeness. For further details on the Digital Probe please see the Orbit3 catalog and the Digital Probe User Leaflet.

7.2 MODULE OPERATING ENVIRONMENT

Temperature	Operating: 0ºC to + 60ºC
	Storage: -20ºC to + 85ºC
Sealing	IP43

8 ANALOGUE INPUT MODULE

8.1 INTRODUCTION

The Analogue Input module (AIM) enables third party sensors to be easily added to the Orbit® Measurement System. This enables the Orbit3 Measurement System to measure temperature, pressure etc.

WARNING: Do not exceed 50V input with respect to 0V common

8.2 TECHNICAL SPECIFICATION STANDARD AIM.

8.2.1 AIM Inputs

Voltage Input Options	±1V, ±5V, ±10V 0V to +5V, 0V to +10V, 0V to +24V
Current Input Options	4-20mA, ±20mA, 0-20mA
Voltage Input Impedance	±1V : 24kΩ others 200kΩ
Current Input Impedance	10Ω

8.2.2 AIM Performance

Bandwidth	Programmable 6Hz to 460Hz	
Resolution	Programmable 14, 16 or 18 bits	
Linearity	0.05% FSO	
Offset Voltage	0V to +5V	2.5mV
	0V to +10V	5mV
	±1V, ±5V	5mV
	±10V	10mV
Offset current	4-20mA	20µA
	±20mA	40µA
Temperature Coefficient	Offset	0.05% FSO/ºC
	Span	0.02% FSO/ºC
Warm Up Time	95% accuracy after 5 minutes from switch on assuming ambient temperature between 10ºC and 30ºC	

8.2.3 AIM Environment

Energizing	See Module Power Consumption and Environment table
Temperature	
Sealing	IP43

8.2.4 Connection Details Voltage AIM

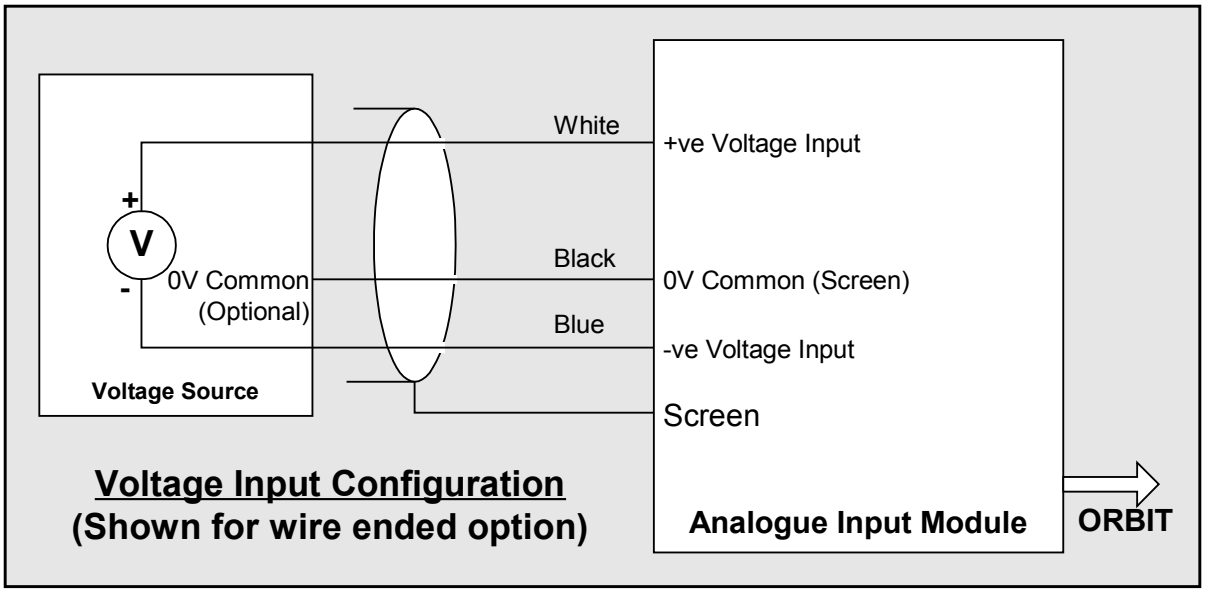

8.2.5 Connection Details Current AIM

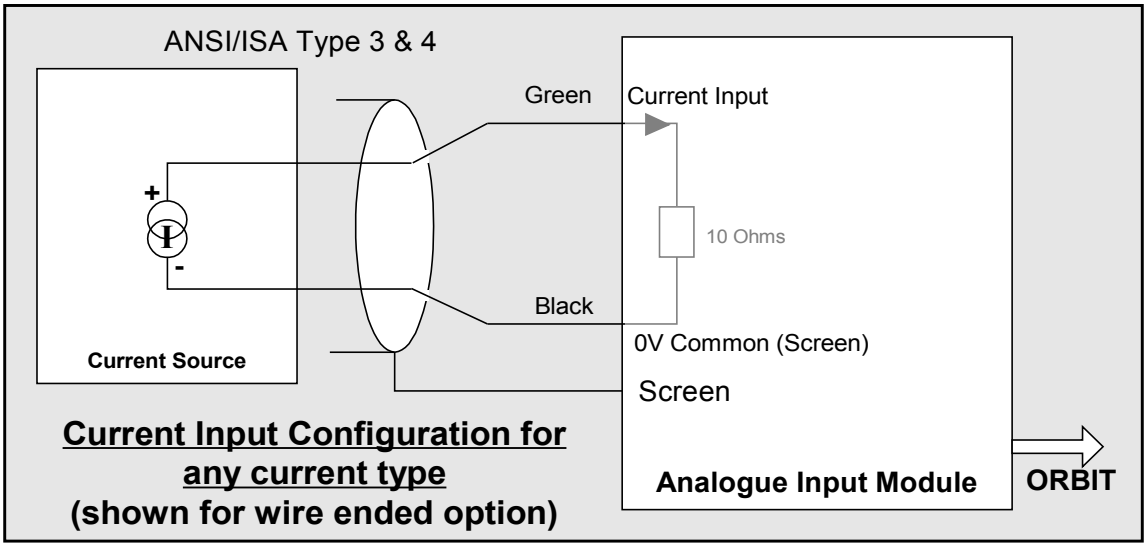

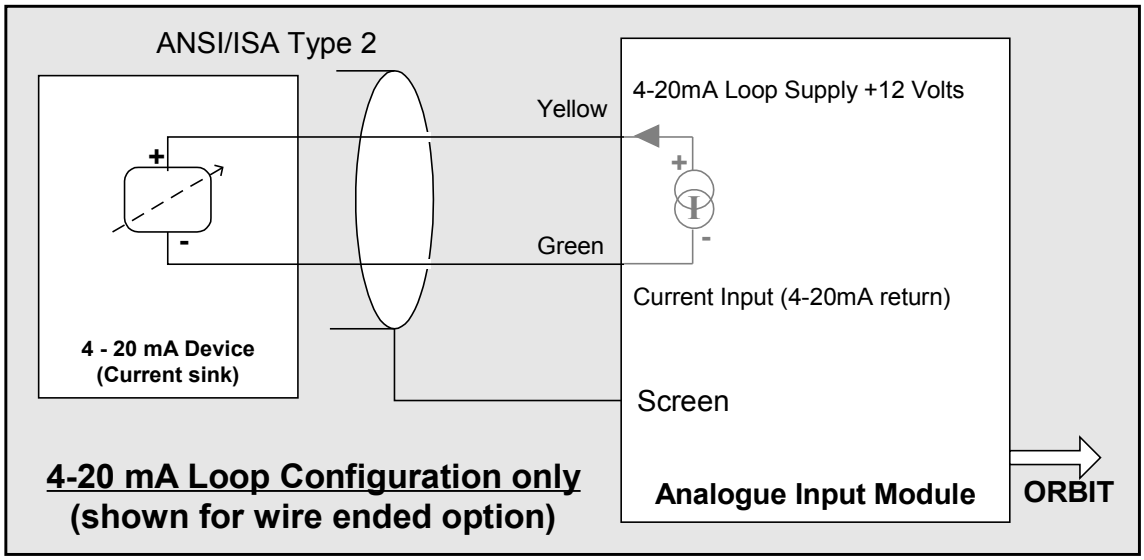

8.3 TECHNICAL SPECIFICATION PT100 AIM.

8.3.1 PT100 AIM relationship between Temperature and Resistance

The PT100 AIM is a special module for use with a PT100 temperature sensor. The PT100 is a widely used sensor in which the resistance varies as a function of temperature. The equation for the PT100 is:-

$R_t=R_0(1+at+Bt^2)$

Where t = temperature in ºC
Rt = resistance at temperature t in Ω
R_0 = resistance at 0ºC
A = alpha coefficient 0.391 Ω/ºC
B = beta coefficient -5.78×10^{-7}

The beta term is used to correct for non linearity. The exact values used for alpha and beta vary according to the specified operating range. This equation allows temperature to be accurately measured using a resistance measurement. The PT100 AIM is calibrated against a series of precision resistors.

8.3.2 PT100 Temperature and Resistance Tolerance Table

The PT100 sensor itself has a tolerance, there are two types A and B. The following table shows the PT100 sensor tolerance as specified in IEC 751 Standard. The PT100 AIM tolerance can never be better than the tolerance of the PT100 sensor.

Temperature	Resistance	Tolerance			
		Class A		Class B	
ºC	Ω	±ºC	Ω	±ºC	Ω
-200	18.52	0.55	0.24	1.3	0.56
-100.00	60.26	0.35	0.12	0.8	0.32
0.00	100.00	0.15	0.06	0.3	0.12
100.00	138.51	0.35	0.13	0.8	0.30
200.00	175.86	0.55	0.20	1.3	0.48
300.00	212.05	0.75	0.27	1.8	0.64
400.00	247.09	0.95	0.33	2.3	0.79
500.00	280.98	1.15	0.38	2.8	0.93
600.00	313.71	1.35	0.43	3.3	1.06
650.00	329.64	1.45	0.46	3.6	1.13
700.00	345.28			3.8	1.17
800.00	375.70			4.3	1.28
850.00	390.48			4.6	1.34

8.3.3 AIM PT100 Accuracy

Apart from the tolerance of the PT100 sensor the PT100 AIM accuracy is effected by the connection method. The PT100 AIM is designed to be connected as a four wire connection. If the PT100 AIM is connected in any other way then the accuracy will be compromised. Ensure that the sense wires are connected close to the sensor to avoid unwanted lead effects.

8.3.4 Connection Details PT100

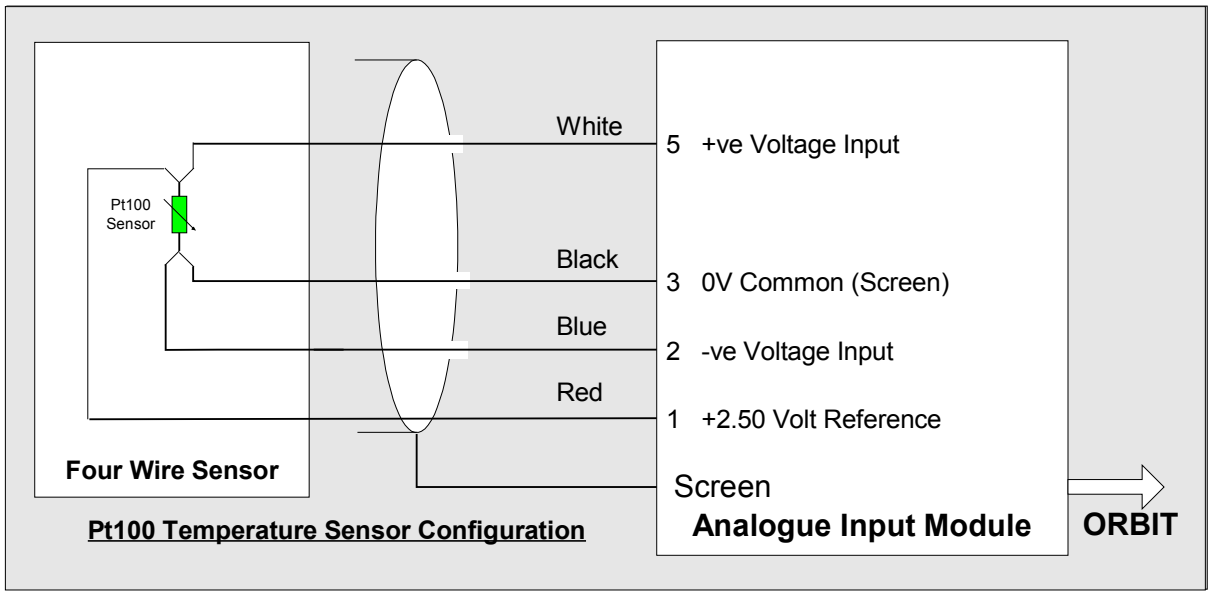

9 ENCODER INPUT MODULE

9.1 INTRODUCTION

The Encoder Input Module (EIM) is an Orbit Module which can interface to incremental and rotary encoders with square wave outputs, allowing these sensors to be interfaced into the Orbit Measurement System. Using rotary encoders via the EIM in conjunction with linear measurement sensors allows the Orbit Measurement System to perform part profiling.

9.2 TECHNICAL SPECIFICATION

Inputs

Input Signal Type	Single ended or differential square waves with open collector or push pull outputs. Voltage Range: 0 to 30V Max
Differential Input Signal Switching levels	High, VID > 0.2V Low, VID < 0.2V
Single Ended Input Switching Voltage	High > 2.4V Low < 1V
Frequency	1.2MHz Max Using higher frequency may make the EIM read incorrectly

Operational Modes

The EIM can be used like any other Orbit Module where a controller reads from the EIM on command. The EIM can form part of a dynamic collection. The EIM can be handed control and provide synchronization for a dynamic collection.

See the Orbit3 Software Manual for further information on using the EIM.

Programmable Parameters

Inputs	Single Ended Differential
Interpolation	X1 (default) X2 X4
	Count AB
	Count DIR
Reference Pulse	Do nothing Reset counter on reference pulse Preset counter on reference Pulse Reset counter on first reference pulse only Preset counter on first reference pulse only Reset counter on first reference pulse only and enable, Synch, Transmit and Holdoff functions Preset counter on first reference pulse only and enable, Synch, Transmit and Holdoff functions

Please see the Orbit Measurement System Software Manual for further information on using the EIM.

Power consumption and environment is detailed in ORBIT3 MODULES POWER REQUIREMENTS AND ENVIRONMENT

9.3 EIM CONNECTION DETAILS

9.3.1 Basic EIM Wired Ended Connections

Wire Colour	Description
Blue	+5V (out to encoder) 300mA Max
Pink or White	A-
Red	A+
Green	B-
Yellow	B+
Orange	Ref-
Brown	Ref+
Grey	Error
Black	0V

Count Direction, the EIM will provide an increasing count when A leads B

9.3.2 Quadrature Mode

Input Type – Single Ended		Input Type Differential	
Encoder Signal	EIM Input	Encoder Signal	EIM Input
A Out	A+	A+ Out	A+
No Connection	A-	A- Out	A-
B Out	B+	B+ Out	B+
No Connection	B-	B- Out	B-
Ref Out	Ref+	Ref Out	Ref+
No Connection	Ref-	Ref- Out	Ref-

Note
The inputs to the EIM that have No Connection must be left unconnected. If the encoder has no reference output the EIM Ref+ input can be connected to the EIM 0V to improve noise immunity.

9.3.3 CountAB Mode Up

Input Type – Single Ended		Input Type Differential	
Encoder Signal	EIM Input	Encoder Signal	EIM Input
Signal to Count(Low to High)	A+	Signal to Count(Low to High)	A+
No Connection	A-	Inverted A+ Signal	A-
EIM +5V	B+	No Connection	B+
No Connection	B-	EIM 0V	B-
EIM 0V	Ref+	EIM 0V	Ref+
No Connection	Ref-	No Connection	Ref-

See note under quadrature mode

9.3.4 CountAB Mode Down

Input Type – Single Ended		Input Type Differential	
Encoder Signal	EIM Input	Encoder Signal	EIM Input
EIM +5V	A+	No Connection	A+
No Connection	A-	EIM 0V	A-
Signal to Count(Low to High)	B+	Signal to Count(Low to High)	B+
No Connection	B-	Inverted B+	B-
EIM 0V	Ref+	EIM 0V	Ref+
No Connection	Ref-	No Connection	Ref-

See note under quadrature mode

9.3.5 CountDir Mode Up

Input Type – Single Ended		Input Type Differential	
Encoder Signal	EIM Input	Encoder Signal	EIM Input
Signal to Count(Low to High)	A+	Signal to Count(Low to High)	A+
No Connection	A-	Inverted A+	A-
EIM 0V	B+	EIM 0V	B+
No Connection	B-	No Connection	B-
EIM 0V	Ref+	EIM 0V	Ref+
No Connection	Ref-	No Connection	Ref-

See note under quadrature mode

9.3.6 CountDir Mode Down

Input Type – Single Ended		Input Type Differential	
Encoder Signal	EIM Input	Encoder Signal	EIM Input
Signal to Count(Low to High)	A+	Signal to Count(Low to High)	A+
No Connection	A-	Inverted A+	A-
EIM +5V	B+	No Connection	B+
No Connection	B-	EIM 0V	B-
EIM 0V	Ref+	EIM 0V	Ref+
No Connection	Ref-	No Connection	Ref-

See note under quadrature mode

10 DIGIMATIC INTERFACE MODULE

10.1 INTRODUCTION

The Digimatic Input (DIM) Module is designed to connect to any Digital gauge with a Digimatic ((code) Output. The connection to the Digital gauge is via a 10 way male connector which will connect to any Mitutoyo Digimatic compatible gauge.

10.2 CONNECTIONS

Pin	Signal	Description	Direction
1	GND	Signal Ground	
2	DATA	Data Output	To DIM
3	CLOCK	Synchronized Clock Output	To DIM
4	DATA SW	Gauge Data Switch (if fitted)	To DIM
5	REQ#	Data Transmission Request	From DIM
6	Not used		
7	Not used		
8	Not used		
9	Not used		
10	Not used		

For Power Consumption and Environmental Specification refer to ORBIT3 MODULES POWER REQUIREMENTS AND ENVIRONMENT

Note: Pin4 Data SW is not always available on all gauges.

11 DIGITAL INPUT OUTPUT MODULE

11.1 INTRODUCTION

The Digital Input Output Module (DIOM) provides an interface between the Orbit® Measurement System and the external world. The DIOM provides 8 discrete signal lines that can be configured as an input or an output. This provides a simple interface to control switches, PLC etc.

11.2 TECHNICAL SPECIFICATION.

For Power Consumption and Environmental Specification refer to ORBIT3 MODULES POWER REQUIREMENTS AND ENVIRONMENT

11.2.1 DIOM Application

Example of Connection to the DIOM

CAUTION: Inductive loads must be suppressed using diodes

0V load must be connected to supply 0V

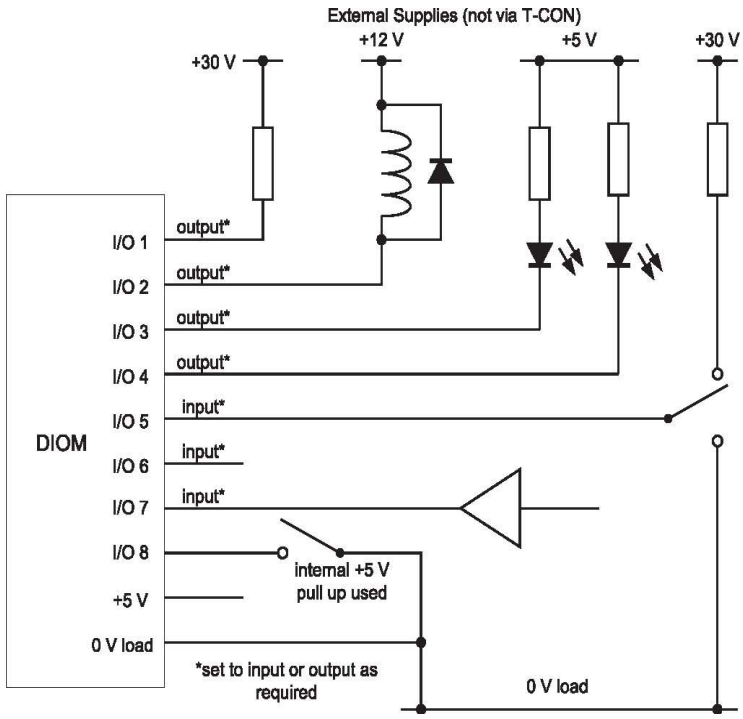

Hints and Tips

External switches can sometimes bounce, be disturbed by vibration, harsh electrical environments can cause spikes. All of these can cause an incorrect reading. Taking multiple readings can help with the elimination of spurious results caused by the former.

11.2.2 Input Port Specification

The output Port must be set High using the Orbit Preset Command before the port can be used as an input. Please refer to the Orbit Software manual for further details.

Input Port Pull Up Resistor	4k7 (to Orbit +5V supply)
High Switching Voltage	≥ 3.15V
Low Switching Voltage	≤ 1.35V
Maximum input rating	-0.5V to +30V
Source current	≤ 1.mA

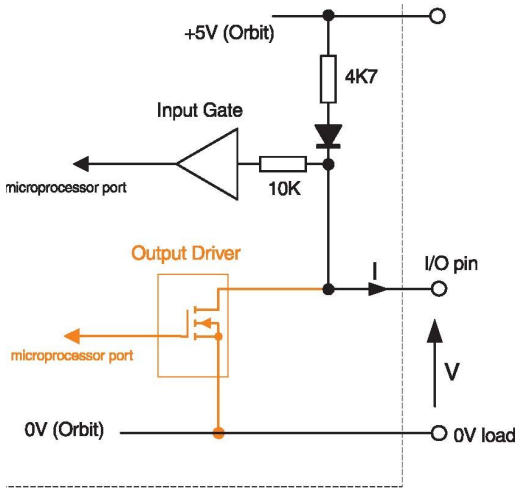

Input Configuration

11.2.3 Output Port Specification with External Supply

Driver Type	Open Drain (requires external Pull UP or load to external supply
High Switching Voltage	≥ 3.15V
Low Output Voltage	≤ 0.2V
Maximum output rating	-0.5V to +30V
Sink current	≤ 50.mA

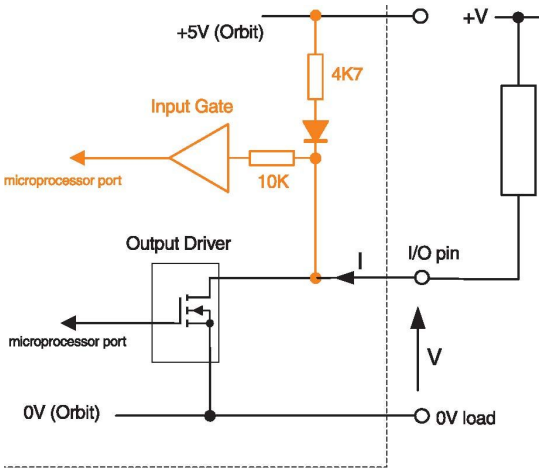

Output Configuration - Load Connected to External Supply

11.2.4 0V connection Rules

CAUTION: Return current for load connected to an external supply MUST be returned to an external supply 0V (load 0V). Failure to do this may damage the DIOM.

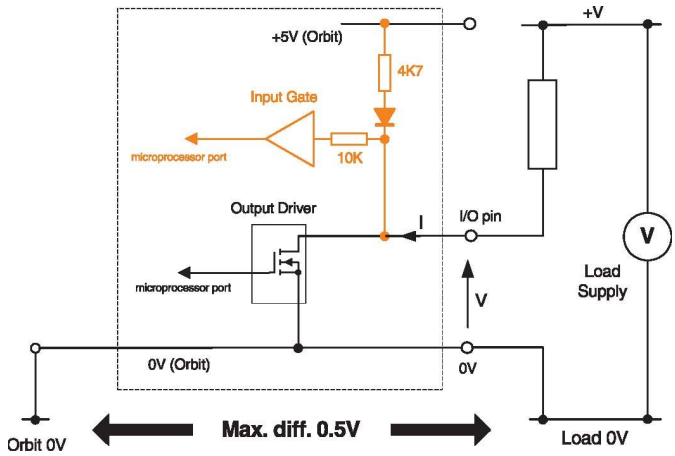

Output Configuration - Load Connected to External Supply

11.2.5 Output Port Specification Driver Using Orbit Supply

The Orbit +5V supply (PIN13 DIOM) . This can supply a MAXIMUM of 50mA which can be used for low power switching of external devices. DO NOT EXCEED 50mA or the DIOM can be damaged.

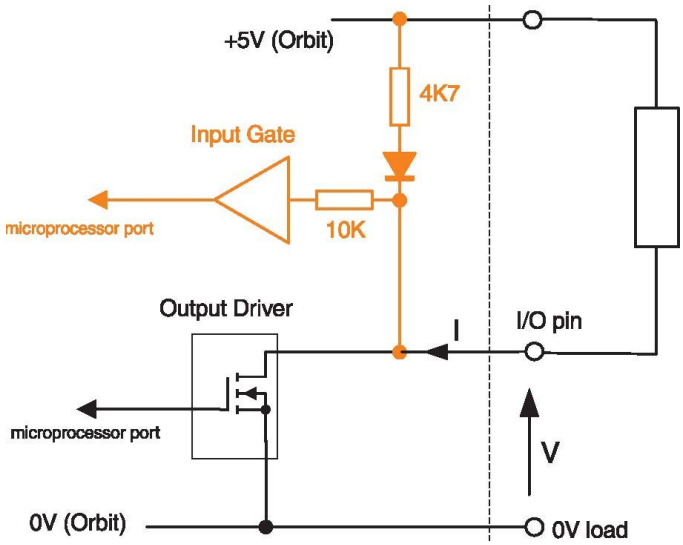

11.2.6 Logic Port Specification

Input Port Pull Up Resistor	4k7 (to Orbit +5V supply)	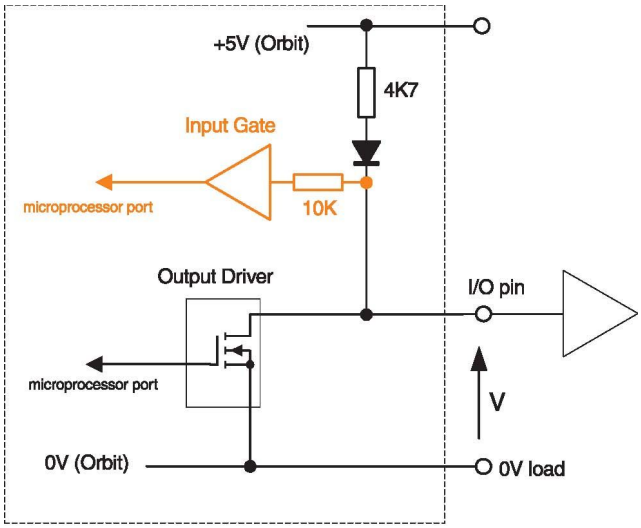 Logic Output Configuration
Low Switching Voltage	≤ 0.2V	

11.3 CONNECTION DETAILS

The DIOM is supplied with a 15 way D Type Connector

PIN	I/O
1	I/O 1
2	I/O 2
3	I/O 3
4	I/O 4
5	I/O 5
6	I/O 6
7	I/O 7
8	I/O 8
9	0V
10	0V
11	0V
12	0V
13	+5V
14	Not used
15	Not used

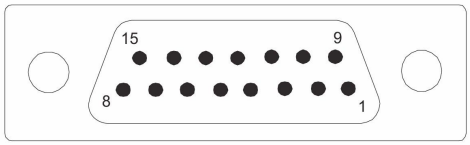

12 REVISION HISTORY

REVISION	DATE	COMMENTS
1	18/02/10	Initial Issue
2	03/03/11	Updated incorrect EMC references – 4 DIOM I/O pin numbers corrected – 11.3
3	10/05/11	Orbit .NET Library reference - 1.1
4	23/05/11	Orbit .NET System manual reference added - 1.1 DIOM Application section moved from 11.3.1 to 11.2.1 - 11.2.1